Introduction

Touching light: seeing sound: Supplementing sensory feedback

Identifying and defining the problem space
What we said we would do under EfL
What we did
Findings
Where it is now and the future for this project

Heath Reed, Principal Industrial Designer, Design Researcher, Design Futures, ADRC
Claire Craig, Senior Lecturer and Researcher, Occupational Therapy, Faculty of Heath and Wellbeing

Introduction

Touching light: seeing sound: Supplementing sensory feedback

The team and what they bring
Background to the project
Identifying and defining the problem space
What we said we would do under EfL
What we did
Findings
Where it is now and the future for this project

Heath Reed, Principal Industrial Designer, Design Researcher, Design Futures, ADRC
Claire Craig, Senior Lecturer and Researcher, Occupational Therapy, Faculty of Heath and Wellbeing

The team

Claire Craig
Health & Wellbeing

Heath Reed
Design Futures (ADRC)

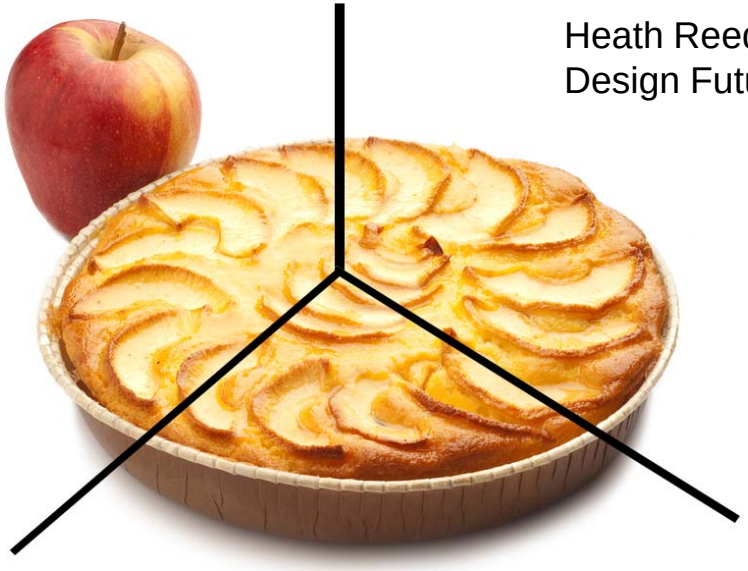

Engineering for Life

Design Futures and ADRC

Design Futures and ADRC

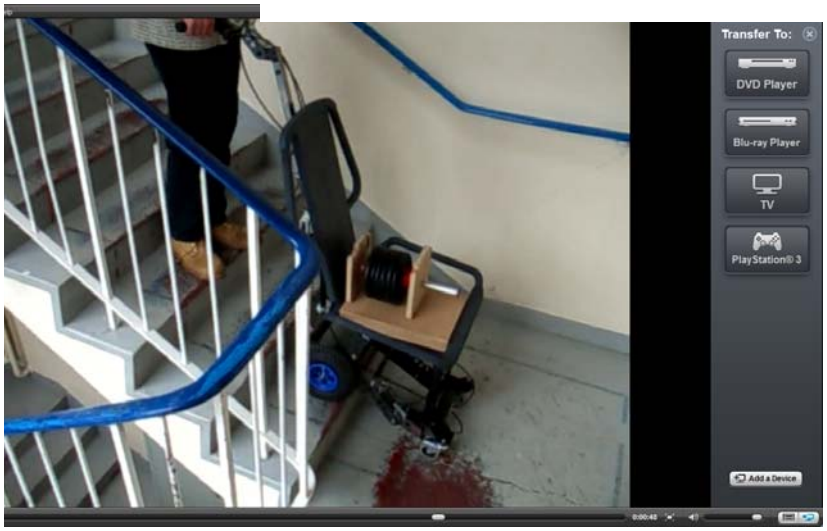

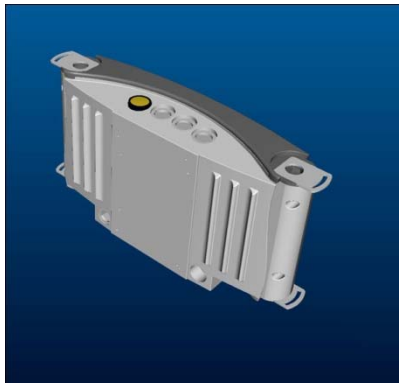

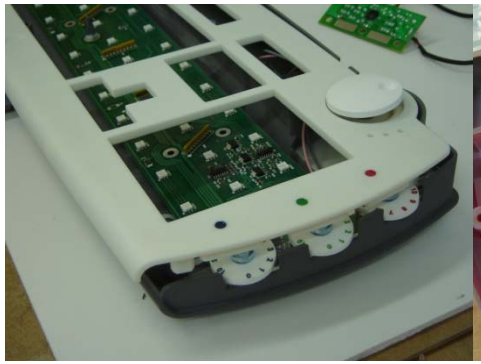
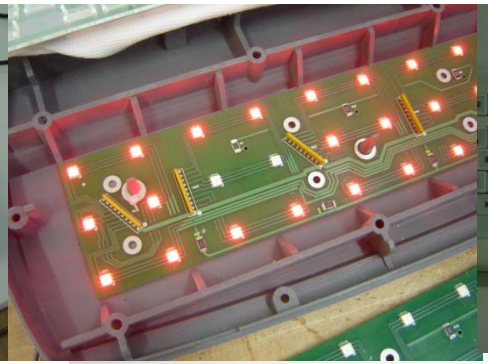




Design Futures - typical projects
and phased activity

Commercial, phased project delivery

research	concepts	design development	detail design	production

Research at any stage (in context of commercial activity)
Innovate at any stage (in context of commercial activity)

Importantly each project is originated by ‘outside’

Design Futures - typical projects and phased activity

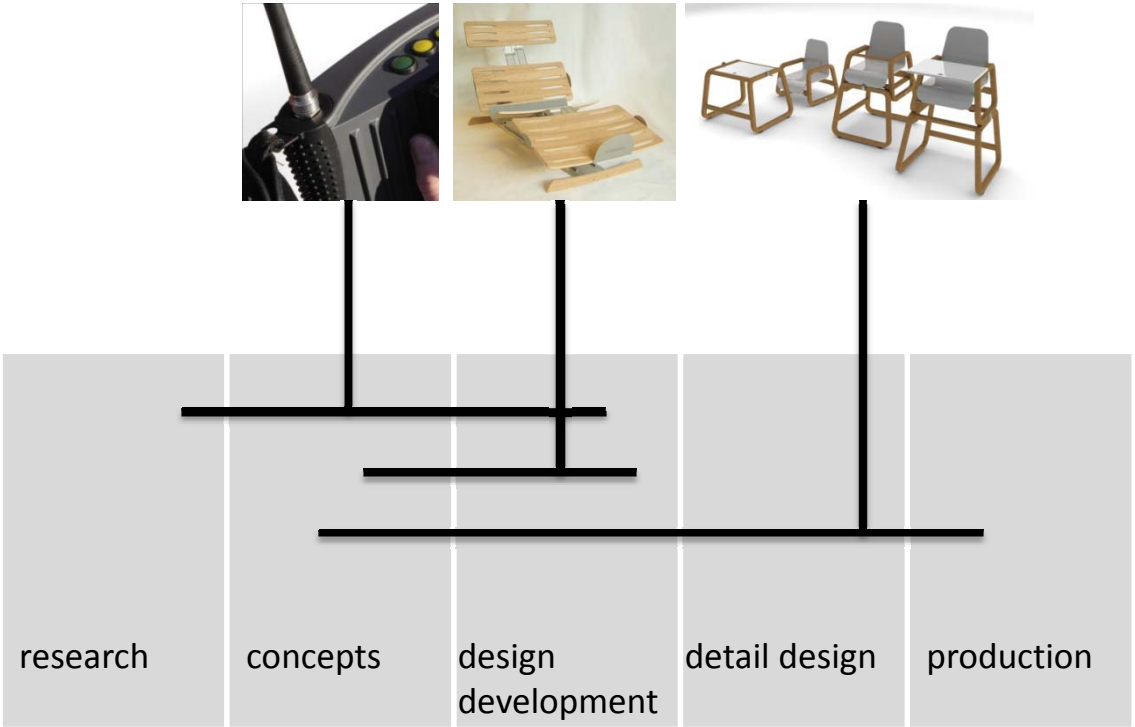

Research at any stage (in context of commercial activity)
Innovate at any stage (in context of commercial activity)

Importantly - each project is originated by ‘outside’

Design Futures - typical projects
and phased activity

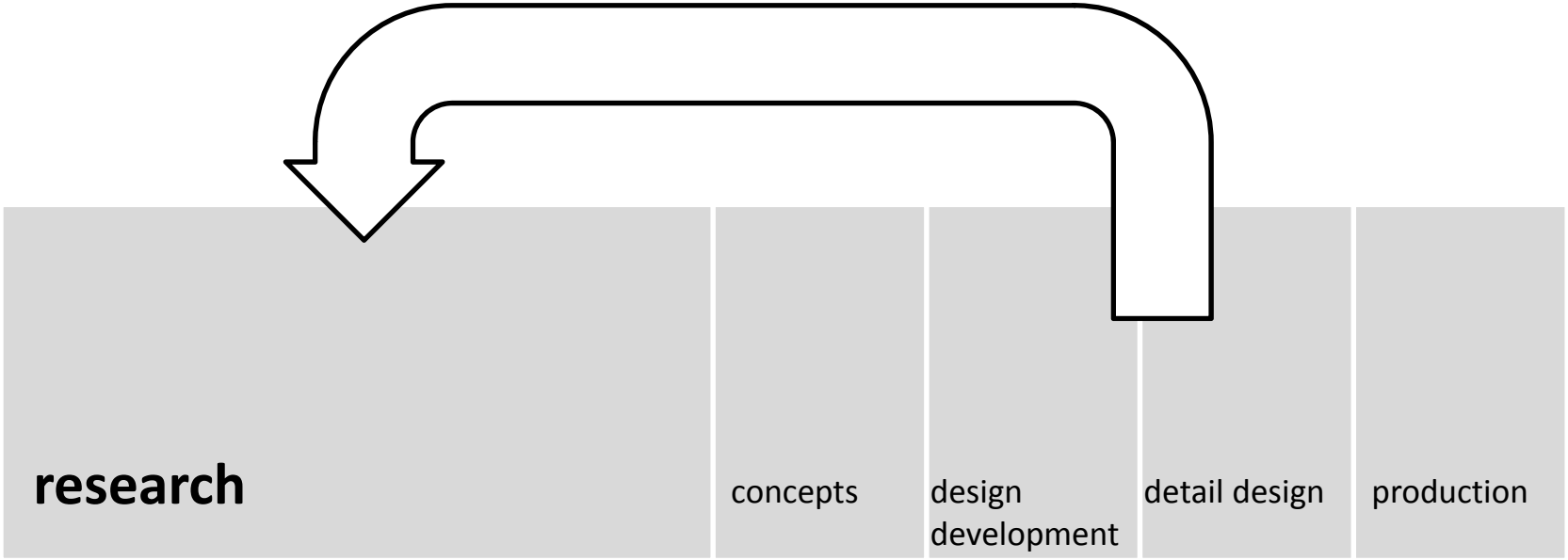

Importantly – projects are originated from within SHU

Apply product develop knowledge to research practice and research principles

Claire Craig & Health and Social Care

An occupational therapist spending much of her work focusing on the needs of older people and people with dementia. Interests including the concept of therapeutic spaces and ways to develop these and also the role of the arts in promoting self-expression for individuals with particular communication needs.

Undertaking my PhD with Chris Rust in the art and design research centre focusing on the potential of participatory photographic research methods offering people living in care environments a voice.

I've just had a wonderful two years working with lab4living which I have thoroughly enjoyed. The learning that has taken place during this time cannot be contained in such a short presentation.

Engineering for Life Bridging the Gap

Professor Nicola Woodroofe
Professor of Neuroimmunology and Head of the BMRC

Theme background

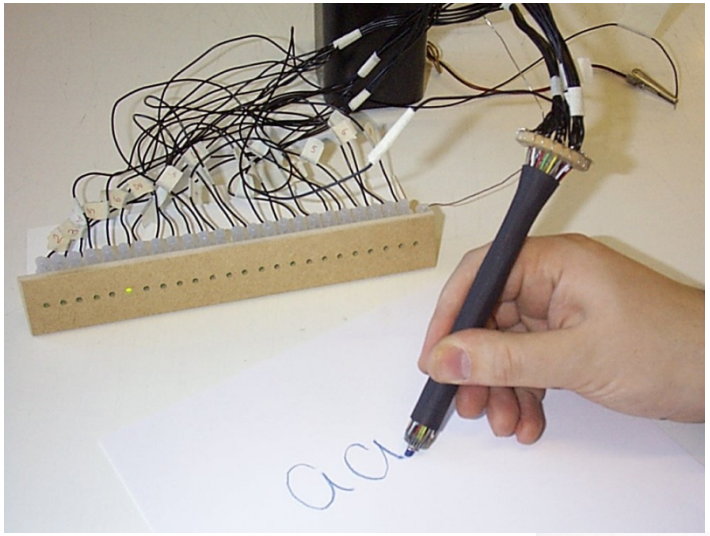

in rehabilitative contexts
in an assistive contexts
in neuro developmental contexts

The team and what they bring
Background to the project
Identifying and defining the problem space
What do we mean by ‘supplementing the senses’
What we said we would do under EfL
What we did
Findings
Where it is now and the future for this project

What do we mean by ‘supplementing the senses’

What do we mean by ‘supplementing the senses’

Sensory substitution is the term given to the use of one human sense to receive information normally received by another sense (Kaczmarek 2000) and has been found to be highly successful in promoting independence in individuals with other types of sensory losses (visual and auditory).

Touching light: seeing sound: Supplementing sensory feedback (devices):

"Thus whilst one may be horrified by the ravages of developmental disorder or disease, one too may see them as creative too for if they destroy particular paths, particular ways of doing things, they may force the nervous system into an unexpected growth and evolution." (Oliver Sacks, 'a neurologist on Mars')

The bodies innate capacity for self-repair and homeostasis is extraordinary. When one sense is diminished others can compensate and become more acute. As Sachs suggests, neural pathways can be forged and research focusing on neuro-plasticity adds credence to his claims. This offers exciting possibilities for designers and raises the question as to whether it is possible to use supplementary sensory feedback (visual, touch, sound etc) in both a compensatory capacity (that is to provide additional cues to overcome loss of feeling or sensation in a particular limb or part of the body) or therapeutically.

For instance, by offering enhanced levels of feedback that are not normally associated with given tasks but which are directly related to those **tasks is there the opportunity for the person to become increasingly engaged and this in itself could aid potentially aid learning or recovery?**

The team and what they bring
Background to the project
Identifying and defining the problem space
What we said we would do under EfL
What we did
Findings
Where it is now and the future for this project

What we said we would do

This initial project seeks to explore the feasibility of a technology promoting supplementary sensory feedback device for individuals with sensory loss.

If this technology is found to be successful it has the potential to promote independence in activities requiring manual dexterity as well as preventing injury to the wrist and hand as a result of exerting excess pressure when performing tasks. Future studies would explore whether it has an added potential as a therapeutic tool for individuals whose sensory losses are less permanent (stroke) drawing on the principles of motor re-learning.

What we said we would do

Touching Light: Seeing Sound: Heath Reed and Claire Craig

- What is the underpinning theoretical base for work in relation to supplementary sensory feedback?
- How are individuals with sensory needs currently utilising supplementary sensory feedback in daily life and where might future devices be required?
- Which populations might potentially benefit from this approach?

Phase one: undertake literature review in relation to supplementary sensory feedback
speak with colleagues across the art and design research centre and Faculty of Health and wellbeing in relation to work already undertaken in this area

Phase two: identify and build links with practitioners (occupational therapists, physiotherapists, educational psychologists) working with individuals with sensory needs (areas identified from literature review and interviews with colleagues)

Phase three: Make links with voluntary sector groups (as identified during phases one and two) and use focus groups to explore how individuals are currently utilising supplementary feedback in daily life and their views on the type of equipment that would be useful

	April	May	June	July	August	September
Literature review						
Discussion with colleagues						
Identify and meet with expert practitioners						
Focus groups with voluntary sector groups						
Data analysis						
Dissemination						

The team and what they bring
Background to the project

Identifying and defining the problem space
What we said we would do under EfL
What we did
Findings
Where it is now and the future for this project

Literature searches

heath.reed@dfgroup.co.uk Account Upgrade Log out

Dropbox

Get Started | Files | Events | Sharing | Help

Dropbox is hiring!
View current openings

Search your Dropbox files

Get Extra Space Free
Install Dropbox

0% in use

My Dropbox » sensory feedback

Upload | New folder | Shared folder options | More actions

Name	Size	Modified
Parent folder		
A Haptic Feedback Sys...stheses.pdf	1.04MB	05/03/10 9:32PM
a neural model for ab...ception.pdf	400.62KB	05/03/10 9:32PM
A positive influence ...disease.pdf	99.89KB	05/03/10 9:32PM
A reflection on motor...actice..pdf	208.53KB	05/03/10 9:32PM
Adaptive Haptic Feedb...ulators.pdf	1.18MB	05/03/10 9:32PM
assisted movement stroke rehab.pdf	276.37KB	05/03/10 9:32PM
cerebral palsy.pdf	751.55KB	05/03/10 9:32PM
other possible articles.doc	0.89MB	05/03/10 9:32PM
Postural adaptations ...adults..pdf	667.35KB	05/03/10 9:32PM
Postural effects of t...e ankle.pdf	102.37KB	05/03/10 9:32PM
sensory feedback depe...stutter.pdf	737.62KB	05/03/10 9:32PM
sensory feedback scho...ronment.pdf	301.53KB	05/03/10 9:32PM
Signals of motor comm...eptors..pdf	428.78KB	05/03/10 9:32PM
stroke and sensory loss.pdf	89.32KB	05/03/10 9:32PM
The effect of texture...erosis..pdf	135.33KB	05/03/10 9:32PM
The write-say method ...ilities.pdf	456.80KB	05/03/10 9:32PM
Use of an oral sensor... in the.pdf	474.09KB	05/03/10 9:32PM

Findings

A range of long-term health problems (diabetes, multiple sclerosis) result in the condition, peripheral neuropathy where nerve damage causes the person to experience change or loss of sensation.

When this affects the nerves in the hands it can result in significant loss of function as the person lacks the necessary sensory feedback mechanisms to register the level of force exerted. This can result in difficulties in performing everyday tasks requiring grip or manual dexterity such as writing or holding cutlery and can also lead to referred pain in the wrist when the person grips the object too tightly for prolonged periods of time.

Diabetes Mellitus affects more than one hundred million people world-wide and according to Ratzon et al 60-70% of these individuals have some form of associated nerve damage (2010 p277).

Peripheral neuropathy is the most frequent form of and a common cause of morbidity in patients with diabetes (Rumrill et al 1997, Brill 2000). For individuals living with other long term neurological conditions such as multiple sclerosis altered sensory and motor control can also be a feature of progression of the disease.

Limitations in hand function can be a significant consequence of sensorimotor neuropathy caused in part by a lack of feedback in relation to pain and pressure and in part by motor changes to the intrinsic muscles of the hand (Casanova et al 1991, Cetinus et al 2005, Traviesto and Lederman). Little research has been undertaken in relation to the impact of peripheral neuropathy and work by Rumrill et al (1997) suggested that where individuals experienced reduced hand function they were less likely to be in paid employment.

In the field of diabetes there has been recognition of the importance of enabling people with such sensory loss to access to technologies that enable them to self-monitor their grip strength in order to measure reduction in the components of hand function before the individual has become aware of the symptoms and to enable appropriate interventions in order to prevent the development of more serious and debilitating complications of diabetes.

Sensory losses, particularly in relation to hand function can have a devastating impact on a person's ability to undertake a range of activities independently and also to their psychological wellbeing.

Although there is significant body of literature in the field of sensory feedback losses our key findings in this work are that there does appear to be a gap in the established research base as regards its use in this way.

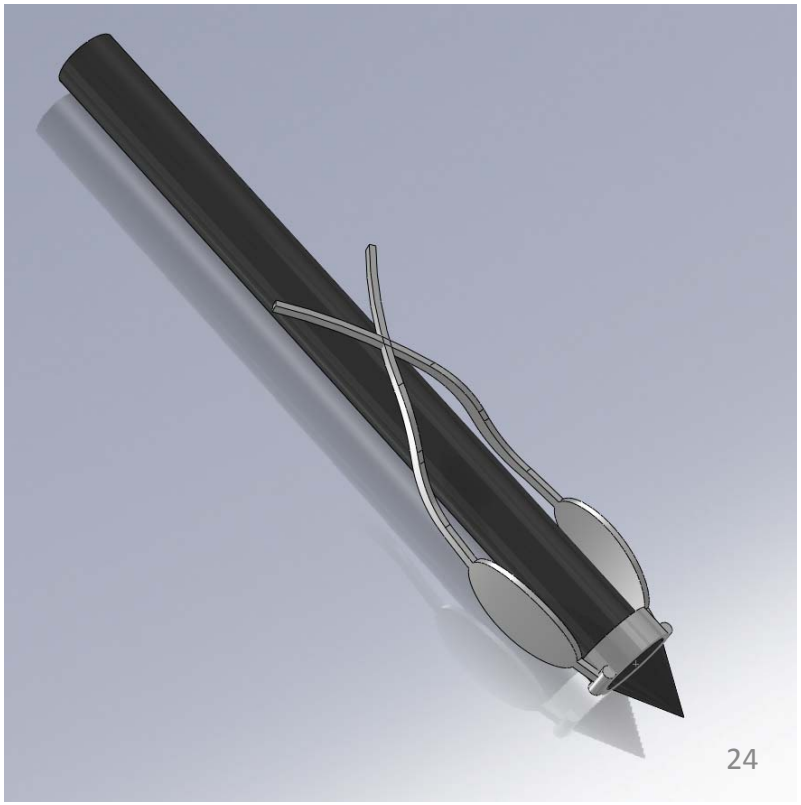

What we have done

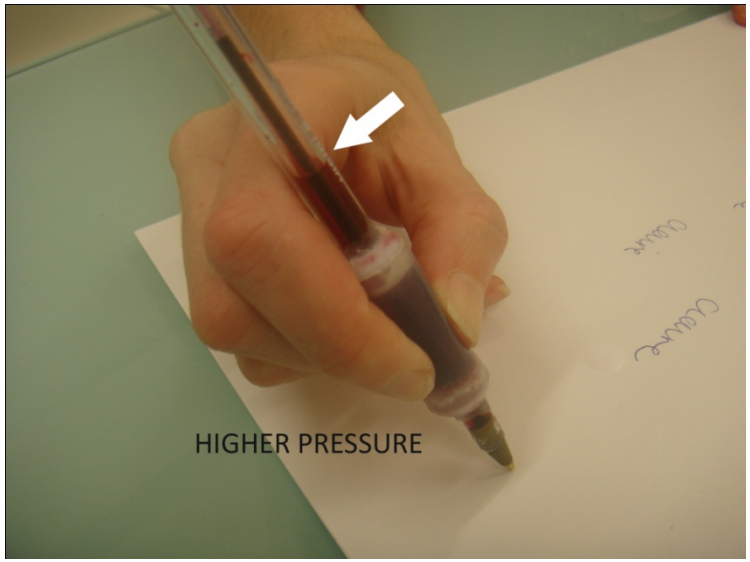

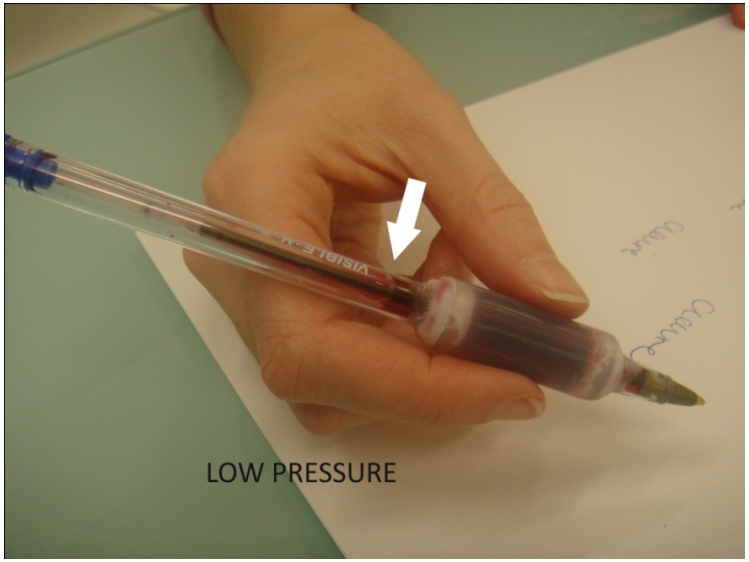

Using visual feedback to assist users in understand how much force is applied to pen barrel (peripheral neuropathy and hyperextension)

Device for visualising grasp / fingertip pressure / force

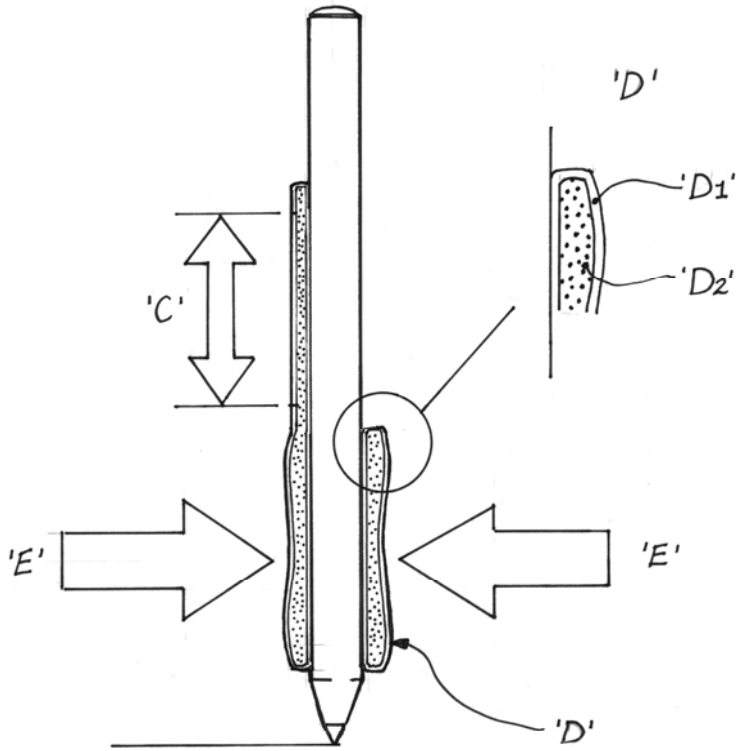

SECTION THROUGH DEVICE

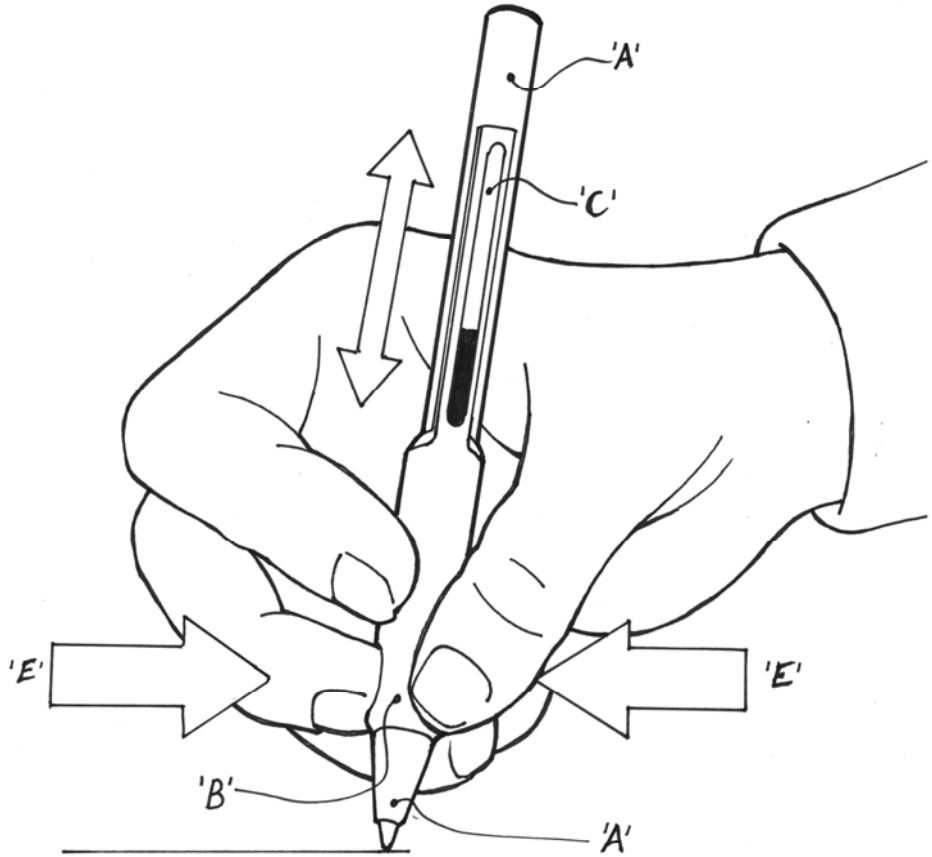

The device ('B') provides users suffering aspects of sensory loss (peripheral neuropathy) with additional, supplementary or compensatory feedback in the form of visual information as a direct result of the task being undertaken. In this embodiment of the invention (a pen or stylus ('A') is used for example only) a liquid or gel filled chamber ('B') is positioned in the area of the stylus ('A') grip ('D'). Forces ('E') applied to the chamber ('D2') propel liquid gel up / down a visual display tube ('C').

A	Pen / marker barrel
B	Indicator device assembly
C	Transparent / aperture viewing window
D	Device pressure / grasp area
D1	Compressible outer
D2	Gel / liquid filled cavity
E	Applied grip / grasp pressure direction

Drawing 1 of 1: Efl Devices 'gel pen' V1

i4i bid aims

•Further establish the evidence base in relation to how existing sensory substitution is used

•Examine the strategies used to perform everyday tasks currently utilised by individuals with reduced sensation in their hands

•Develop and test a piece of technology in the form of a stylus offering visual feedback to indicate the level of force exerted by the person when gripping the instrument

•Begin to explore the acceptability of such technology when embedded into everyday objects

•Seek to understand potential barriers in relation to developing such technology further

What's going on now –

I4i Bid plan

WP1 - Eliciting insight
WP2 - Developing interventions
WP3 - Testing and evaluating
WP4 - Review, disseminate and next steps

- How do grip force issues manifest during daily activities?
- What types of activity are seen to be problematic when experiencing sensory loss?
- What copping strategies do individuals employ to overcome barriers?
- What types of products do people engage with and why?
- What barriers are there to (micro and macro) to implementation?
- What types and levels of invasiveness / stigmatisation are acceptable?
- User and social acceptability considerations for the design of devices

The EfL experience

Key to this type of project has been the openness and willingness of its participants to genuinely engage in crossdisiplinary thinking (maybe eventually ‘transdisiplinary’)

Funding – **seed corn** funded only, but nevertheless very time consuming!

Time – The larger bid application (i4i) accounted for a large proportion of the funded time and...

...these are call dependant.

This means we need to bank some time which in turn affects our project targets and timescales

Because the available slots of time are small we have experience ‘ramp up’ time problems

Logistics - Getting everybody together (even in such a small team) can be problematic and..

Communication methods have posed some problems

NOT NEGATIVE!

Without the EfL none of our aims would have been facilitated

In putting together this proposal we have already glimpsed something of the different ways disciplines approach such design questions and we are keen to learn from each other more about these reasoning processes and how we might capture these and utilise them within future projects. We often come for different ends of the problem, clinician finding out why without preconceived solutions and designers (often) producing pre-conceived problem solutions. So we are interested in meeting and developing in the middle and in ways of using design as a ‘mobiliser’ of new solutions.